QA1250D SERIES SEAL CHARGER

This series chargers design of sealed structure. It suitable for flooded lead acid batteries, sealed lead acid batteries, Lithium batteries, NI-MH batteries, Nickle Cadmium batteries, etc. They ate used to cycle charge or floating charge battery pack in electric cars, sightseeing vehicles, patrol vehicles, fork lifts, Aerial work platforms. Floor Sweeper, Electric Motorcycles, Electric Sweepers, Electric Surfboards, Electric Golf Carts， Electric Vehicles， Electric Sweepers, Electric tricycle .

Models	Rated Voltage for Battery Pack	Max Output Voltage Range	Max Output current @220V	Max Output current @120V	CV			cut-off Current
					Lead Acid	Li-ion	LiFePO 4	Li
QA1250D-24V30A	24V	24-34V	30A	30A	29.4V	29.4V	29.2V	3.0A
QA1250D-36V30A	36V	30-44V	30A	25A	44.1V	42.0V	43.8V	3.0A
QA1250D-48V25A	48V	39-60V	25A	18A	58.8V	54.6V	58.4V	3.0A
QA1250D-60V20A	60V	48-73V	20A	15A	73.5V	67.2V	73.0V	2.0A
QA1250D-72V15A	72V	60-88V	15A	12A	88.2V	84.0V	84.0V	1.5A
QA1250D-84V12A	84V	72-103V	12A	10A	103V	105V	103V	1.5A

TECHNOLOGY PARAMETERS			
AC Input Voltage Range	100-240VAC；45-65HZ		
AC Input Max Current	5.5A@220VAC		
Efficiency	≥92.0%	Power Factor	≥0.99
Noise	≤45dB	Protection level	IP65
Product characteristics			
SAFFTY	Active PFC and LLC technique is applied for a rapid respond on a fault; Quick active software self -protection and reliable passive hardware self-protection on VOLTAGE&CURRENT; Advanced charging strategy is integrated as a safeguard for battery system.		
RELIABILITY	The shell is shaped by integrated die casting technique. And filled with special glue. The active cooling fan is also designed to be a fan with a potting structure and a longer life. Products of Charger Series have been operating in all kinds of industrial environment (Wet. Hot. Cold. High altitude) for more than ten years,the design is proved to pass the verification.		
FUCTIONS	Three color indicator lights Charging Interlock System CAN BUS Interface +Auxiliary Power		
SIZE AND WEIGHT&TEMPERATURE			
Net Weight	3.3kg	Operating Temperature	—20℃—50℃
Storage Temperature	—40℃—95℃	Size	282.8*139.5*73.3

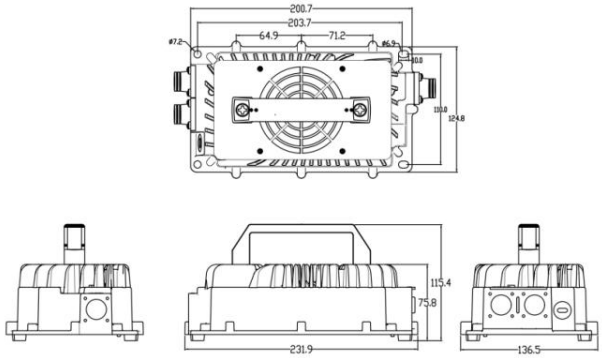

PROTECTION FUNCTIONS

Burnout Protection	Temperature of charger exceeds the limitation. The charge will low down the power load. Temperature of environment exceeds 65℃, the charger will stop charging and switch itself to standby mode until temperature of environment goes down.
Protection for Reverse Connection of Batteries	The circuit inside the charger shuts down with batteries when the batteries are connected reversely and will not damage the charger.
NO-load Protection	There is no output when the batteries are not connected.
Short Circuit Protection	The circuit inside the charger shuts down with batteries when output is short circuit. The charger will start charging only after troubleshooting and restart the charger.
Automatic shutdown when fully charging	The charging automatically turns off after the battery is fully charged according to the charger's judgment.